MODEL BB-S101 BIG BUBBA® FILTER SYSTEM						
MODEL NO.	ORDERING CODES	INLET (A)	OUTLET (B)	OVERALL HEIGHT (C)	OVERALL DEPTH (D)	OVERALL WIDTH (E)
BB-S101	7100996	21.6"	3.9"	42.6"	14.2"	22.3"

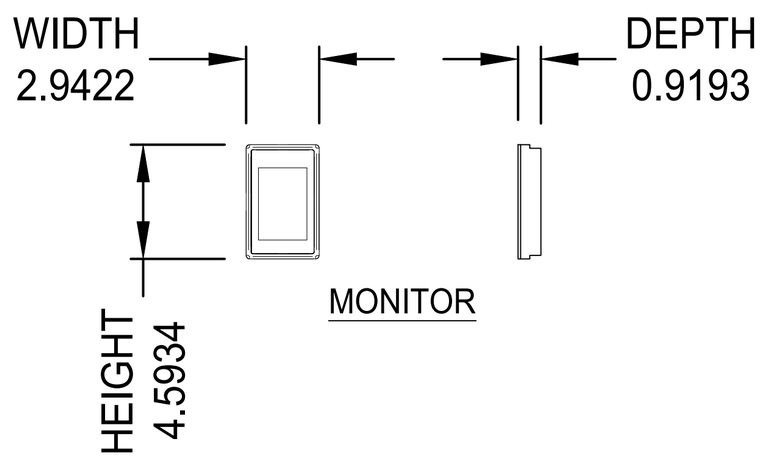

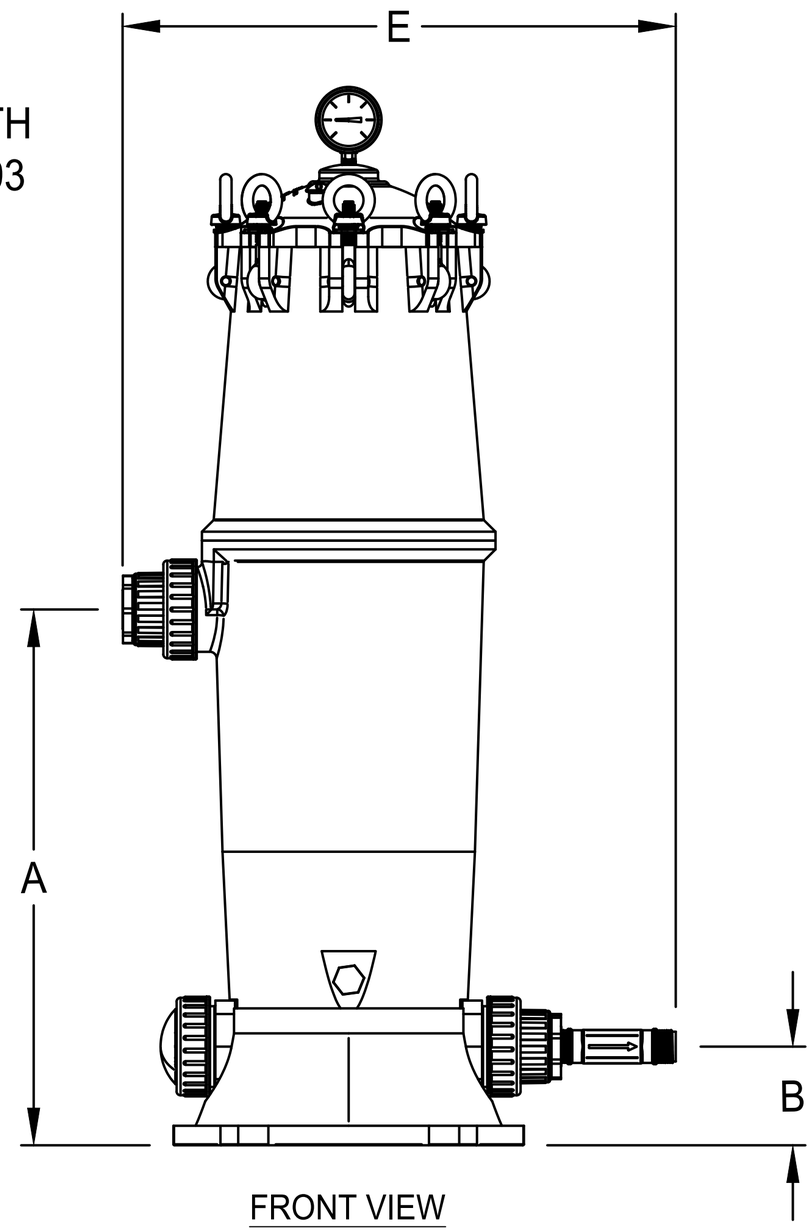

FRONT VIEW

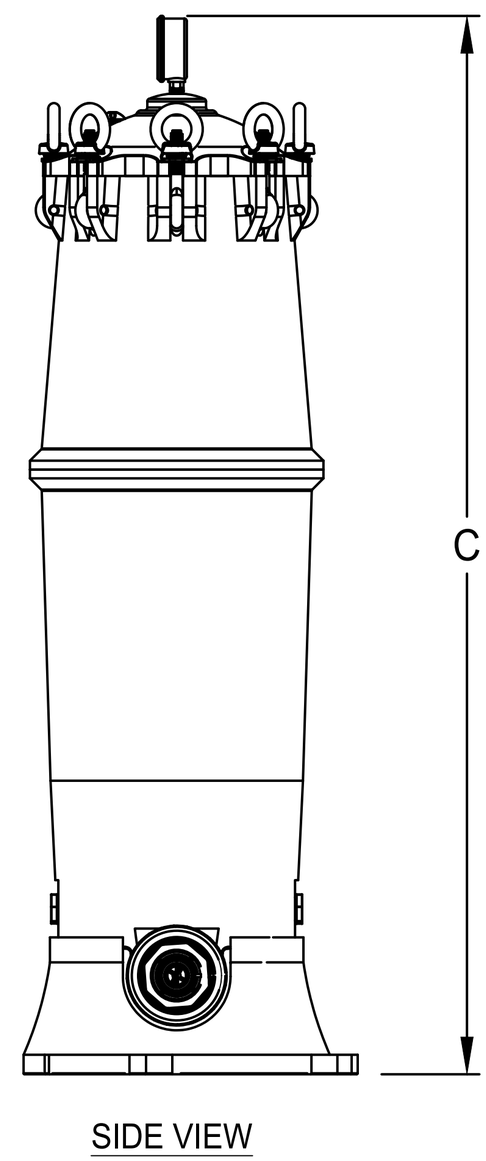

SIDE VIEW

NOTE:
DIMENSIONS ARE SUBJECT TO CHANGE WITHOUT NOTICE

WATTS®

SERIES BB-S101

DRAWN BY:	J. RIVAS
SCALE:	NOT TO SCALE
DATE:	9/1/2021
DWG No.	BB-S101